Female Header

Pitch:2.54mm

Single Row/Dual Row

DIP/S.M.T

Series 213-218

sgdconn

Http://www.sgdconn.com

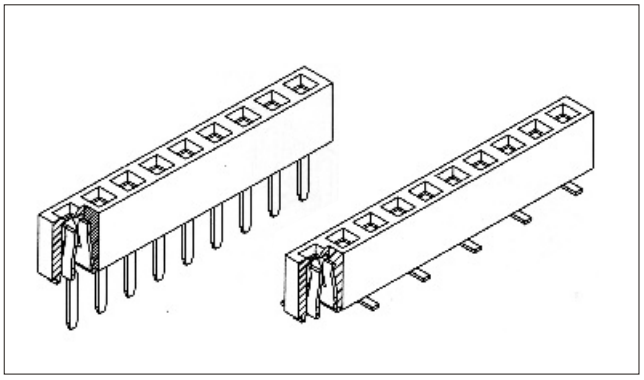

SPECIFICATIONS:

Current Rating: 3.0 AMP
Contact Resistance: 30m• Max
Insulation Resistance: 1000M• Min
Withstand Voltage: 600VAC/minute
Operation Temperature: -40℃ to +105℃

MATERIALS:

Contact Material: Copper Alloy
Contact Plating: Gold or Tin over 50μ″Ni
Insulator: Glass Filled Polyester(UL94V-0)
Standard: PA6T

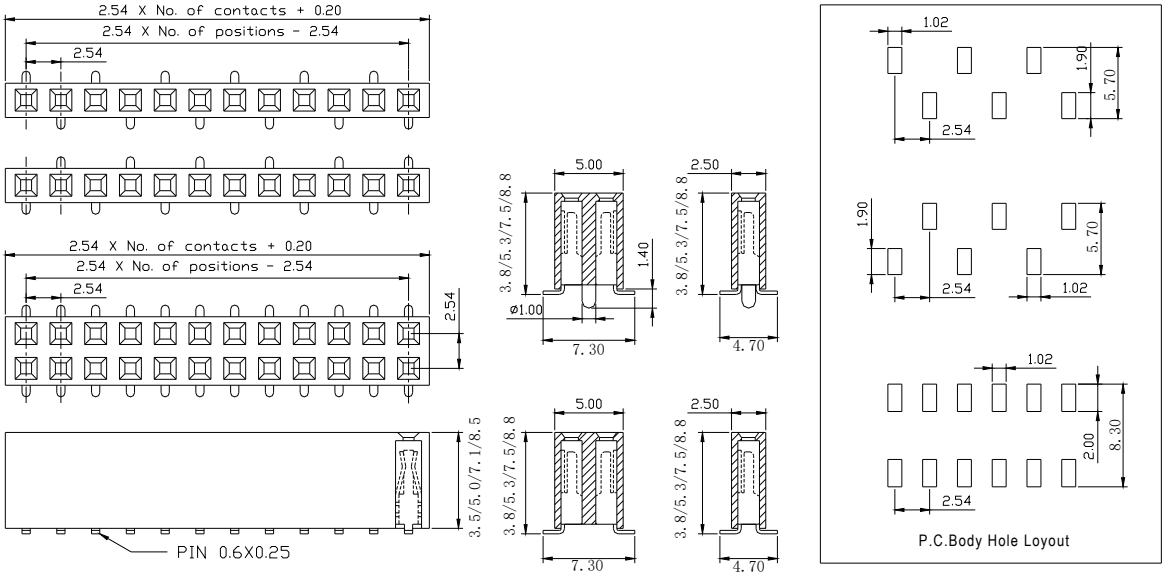

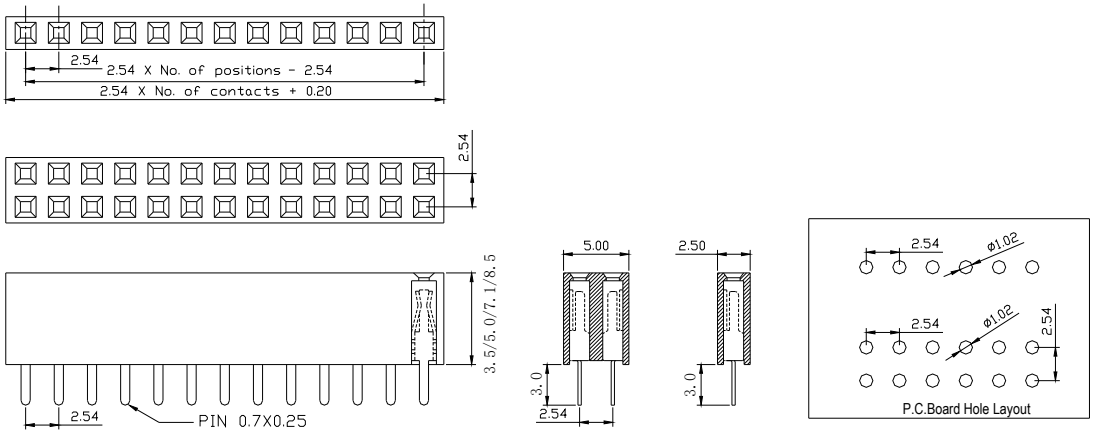

Orderin gCode

①	②	③	④	⑤	⑥	⑦	⑧	⑨	⑩
2	1	X	X	XX	X	1	4	1	0

① Series No.:
2= Female Header

② Pitch: 1= 2.54mm

③ Insulator Height:
3=3.5mm
5=5.0mm
7=7.1mm
8=8.5mm

④ Dip Spacing:
1=Single row
2=Double row

⑤ Number of Contacts:
Single row =01 to 40
Double row=02 to 80

⑥ Tail & Mounting Style:
S=Straight DIP type
M=Straight SMT type

⑦ Contact Plated
0=Tin
1=Gold Flash
2=Gold 3u"
3=Gold 5u"
4=Gold 10u"
5=Gold 15u"
6= Gold 30u"

⑧ Material Type
0=PPS
1=PBT
2=LCP
3=Nylon-66
4=Nylon-6T
5=PA46

⑨ Color:1=Black

⑩ Customer Request

Due to technical progress, all the information provided is subject to change without prior notice.